CNG-Series

The Right Connection®

Quick Disconnect Couplings

Applications
- Used to facilitate the large volume transfer of high-pressure compressed natural gas (CNG) for applications such as virtual CNG pipelines, mining, oil exploration, well site development, and remote location natural gas delivery

Size
- 1”

Features
- Meets CNG service requirements
- Improved body and valve design provides a 30% increased flow performance over standard ISO-B designs
- Latch mechanism provides brinelling resistance
- Locking sleeve design prevents accidental disconnection
- Captured valve O-ring for reliability in high-flow conditions
- CNG plugs supplied with combination dust cap/plug
- Non-sparking material

Material
- 303 stainless steel

Specifications
- Designed to ISO7241-B Series profile
- **5,000 PSI** maximum working pressure

Body Size	Threads	Coupler Part #	Plug Part #
1”	1” - 11-1/2 NPTF	8CNGF8-S	CNG8F8-S
1”	1-5/16” - 12 ORB	---	CNG8OM8-S

Dixon Quick Coupling

2925 Chief Court
Dallas, NC 28034
ph: 800.839.8980 • 704.334.9175
fx: 800.839.9022 • 704.334.9002
dixonvalve.com

The Right Connection®

CNG-Series Coupler

Latches
- High strength corrosion resistance
- Large contact area distributes load
- Brinelling resistant design

Locking Sleeve Design

Optimized Geometry to Improve Flow

Machined from 303 stainless steel bar stock

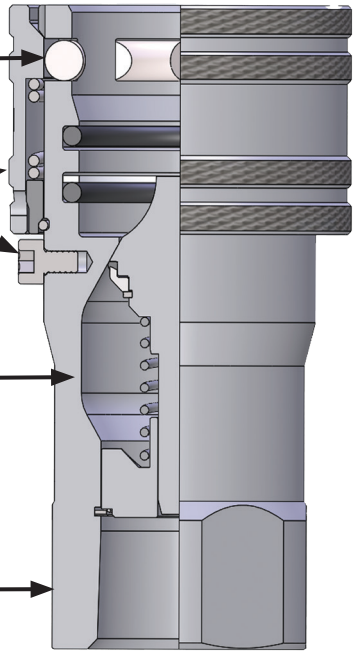

8CNGF8-S

CNG-Series Plug

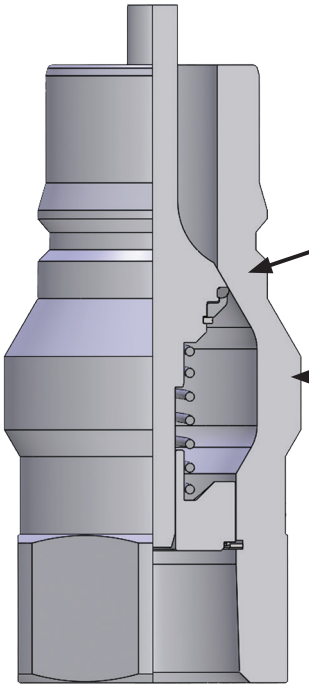

Optimized Geometry to Improve Flow
- Elongated plug body length
- Captured valve O-ring

Machined from 303 stainless steel bar stock

CNG8F8-S

© 2022 DVCC • CNG_SERIES_1122