24TH-Series Threadless Hanger

QUICK. CLEAN. EFFICIENT.

The 24TH-series threadless hanger from Dixon® Sanitary introduces a new level of efficiency and hygienic design to the hanger market.

This tube hanger incorporates a snap-secure latch system that simplifies and significantly reduces installation times by eliminating the standard thread design. The self-contained inserts guide and protect your tubing.

Applications
- Mounted processing lines
- Skid building

Sizes
- 1”, 1-1/2”, 2”, 3”, 4”

Features
- Partial open position allows for adjustment of tubing prior to final lock in
- Threadless design and bacteria-resistant architecture
- The snap-in clip insert assembly makes this hanger easy to assemble
  - Optionally compatible with our standard sleeve (inserts removed)
- Save time on installation with no tools needed
- Meets MSS SP-58 load ratings

Specifications
- Mounting: compatible with up to 3/4” diameter rod
- Materials of construction
  - Top and bottom halves and latch: 304 stainless steel
  - Hook: 304 stainless steel spring wire
  - Clip inserts: polypropylene
  - Sleeve: polypropylene

Polypropylene Inserts

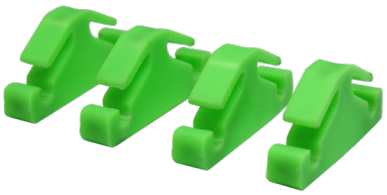

Polypropylene Sleeve

NOTE: The polypropylene inserts and sleeve are not to be used together

The Right Connection®

Closed Position

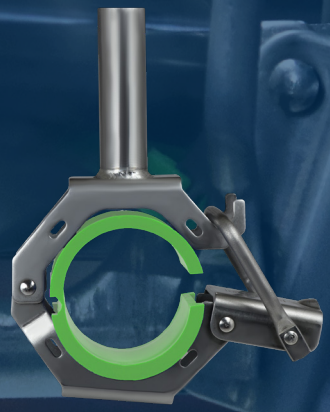

Partial Open Position

Dixon Sanitary

N25 W23040 Paul Road
Pewaukee, WI 53072
ph: 800.789.1718
fx: 800.789.4046
dixonvalve.com

The Right Connection®

Dimensions

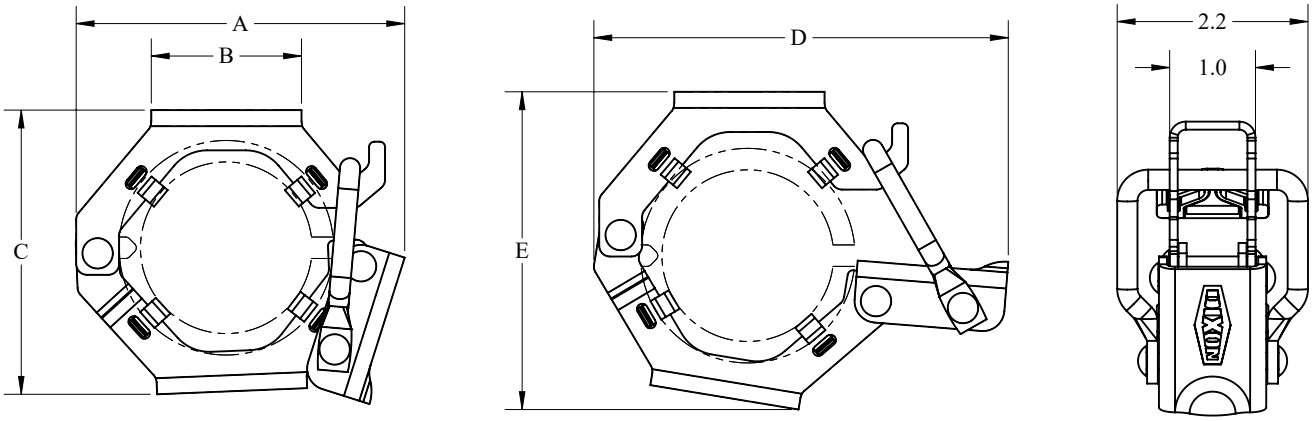

Size	A (in)	B (in)	C (in)	D (in)	E (in)
1"	2.9	1.0	3.2	4.0	3.5
1-1/2"	3.4	1.6	3.2	4.4	3.5
2"	3.8	1.8	3.3	4.8	3.7
3"	5.0	1.8	4.7	6.0	5.0
4"	6.1	2.3	5.8	7.1	6.2

24TH-Series Threadless Hanger - Part Number Key

24TH-Series Threadless Hanger Part Number Key Example: 24THP10		Series	Insert	Size
		24TH	P	10
Series	**Code**			
24TH	24TH			
Inserts	**Code**			
Polypropylene inserts (4 pcs)	P			
Polypropylene sleeve (1 pc)	S			
Size	**Code**			
1"	10			
1-1/2"	15			
2"	20			
3"	30			
4"	40			

24TH-Series Accessories - Part Numbers

Tubing/Hanger Size	Insert Part Number (qty 4)	Sleeve Part Number (qty 1)
1"	24TH-PC	24TH-PS-100
1-1/2"		24TH-PS-150
2"		24TH-PS-200
3"		24TH-PS-300
4"		24TH-PS-400

© 2024 DVCC • DS24TH_0824